Sweet Treats™

CAKE POP MAKER

Includes Apron & Tea Towel

User Instructions

Model: STPCA0010R

The Sweet Treats Cake Pop Maker bakes the most perfect and delicious cake pops for any occasion. Made in just minutes, why not share the treats with all your family and friends.

www.sensiohome.com

Sweet Treats

CAKE POP MAKER

Introduction

Thank you for purchasing this product

You may already be familiar with using a similar product, but do please take time to read these instructions - they have been written to ensure you get the very best from your purchase.

Safety is Important

To ensure your safety and the safety of others, please ensure you read the Product Safety and Electrical Safety information before you operate this product.

Keep these instructions in a safe place for future reference.

Contents

Due to our policy of continuous improvement, the actual product may differ slightly from the one illustrated in this booklet.

read before first use!

Product Safety

Please read these instructions before operating the appliance.

✓ Always ensure the appliance is only used by a responsible adult.

✓ Always use this appliance on a stable, level surface, close to a power socket and out of reach of children.

✓ Always ensure that hands are dry before handling the plug or switching on the appliance.

✓ Always carry out regular checks on the appliance and power cord. Should there be any signs of damage, do not attempt to use or repair. This appliance has no user serviceable parts.

✓ Always unplug this unit when not in use and before cleaning.

✓ Always allow the appliance to fully cool down before cleaning or storing.

✗ Never immerse the appliance, cord or plug into water or any other liquid. This is to protect against electrical shock.

✗ Never use this appliance for other than intended use. This appliance is for household use only.

✗ Never allow children to use this appliance, close supervision is necessary when this appliance is in use near children.

✗ Never let the power cord hang over the edge of a work top, touch hot surfaces or become knotted, trapped or pinched.

✗ Never place on or near heat sources.

✗ Never leave this appliance unattended during use.

✗ Never touch the external surfaces of the appliance during use as they may become very hot.

✗ Never allow this appliance to touch flammable materials when in use, as this may be a fire risk.

✗ Never operate the appliance by means of an external timer.

✗ Never use this appliance outdoors.

Electrical Safety

WARNING!

Read these instructions thoroughly before using this appliance or connecting it to the main supply.

A 13 amp BS1362 ASTA approved fuse must be fitted.

This appliance must be earthed.

There are no user-serviceable parts inside this appliance. Always refer servicing to qualified service personnel.

The mains lead of this product is not replaceable by the user. If the main lead is damaged, the entire appliance should be returned to the Customer Service Department.

Do not allow this product to be exposed to rain or moisture during use or storage.

Before switching on, make sure that the voltage of your electricity supply is the same as that indicated on the rating plate. Connecting it to any other power source may cause damage.

This product may be fitted with a non-rewireable plug. If it is necessary to change the fuse in the plug, the fuse cover must be refitted. If the fuse cover becomes lost or damaged, the plug must not be used until a suitable replacement is obtained.

If the plug has to be changed because it is not suitable for your socket, or due to damage, it should be cut off and a replacement fitted, following the wiring instructions shown. The old plug must be disposed of safely because inserting it into a 13 amp socket could cause an electrical hazard.

Electrical Safety

The wires in the power cable of this product are coloured in accordance with the following code:

Blue = Neutral **Brown = Live** **Green/Yellow = Earth**

If the markings on the terminals of your plug do not correspond to the colours of the wires in the power cable, proceed as follows:

- The wire which is coloured Blue must be connected to the terminal which is marked N or coloured Black.
- The wire which is coloured Brown must be connected to the terminal which is marked L or coloured Red.
- The wire which is coloured Green/Yellow must be connected to the terminal which is marked with the earth symbol (⏚) or coloured Green, or Green/Yellow.

Plug should be BS1363/A approved.
Fit a 13 Amp fuse.

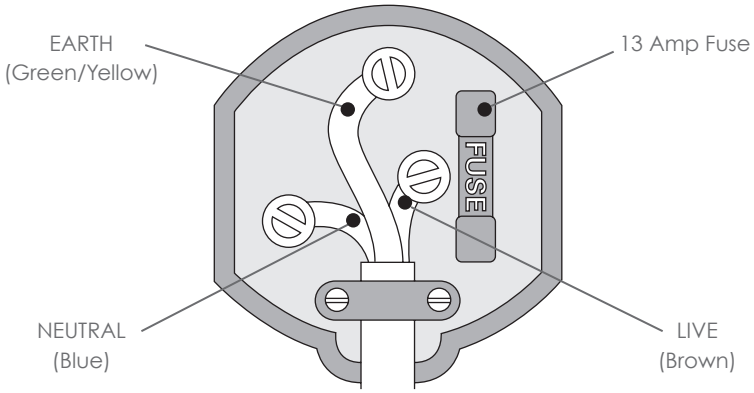

Ensure that the outer sheath of the cable is firmly held by the clamp.

Features

1. **Orange power light**
   This illuminates when your Cake Pop Maker is plugged into mains supply.
2. **Green ready-to-cook light**
   This will illuminate when the Cake Pop Maker is ready to use, which will take approximately 2 minutes.
3. **Lid handle with a locking latch**
   This allows you to open and close the appliance and the latch keeps the plates closed during cooking and storage.
4. **Upper nonstick cooking plate**
5. **Lower nonstick cooking plate**
6. **Non slip rubber feet**

Open View

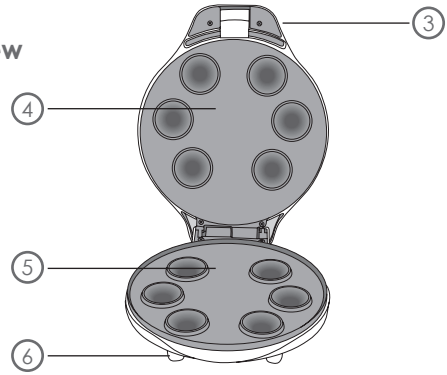

Closed View

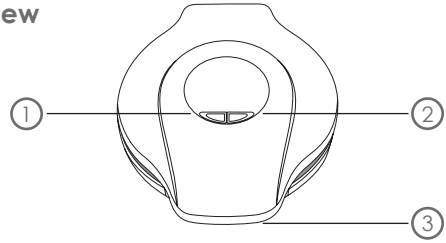

Before First Use

Caution: Do not immerse the Cake Pop Maker MAIN BODY, POWER CORD or the PLUG in water or any other liquids.

Before using your Cake Pop Maker for the first time, remove any packaging material and promotional labels. You may wish to keep the packaging for future use.

Ensure the Cake Pop Maker is switched off at the power outlet and the power cord is unplugged.

Check that the cooking plates are clean and free of manufacturing dust, by wiping each mould with a slightly damp soft cloth.

Wipe the outside of your Cake Pop Maker with a slightly damp soft cloth.

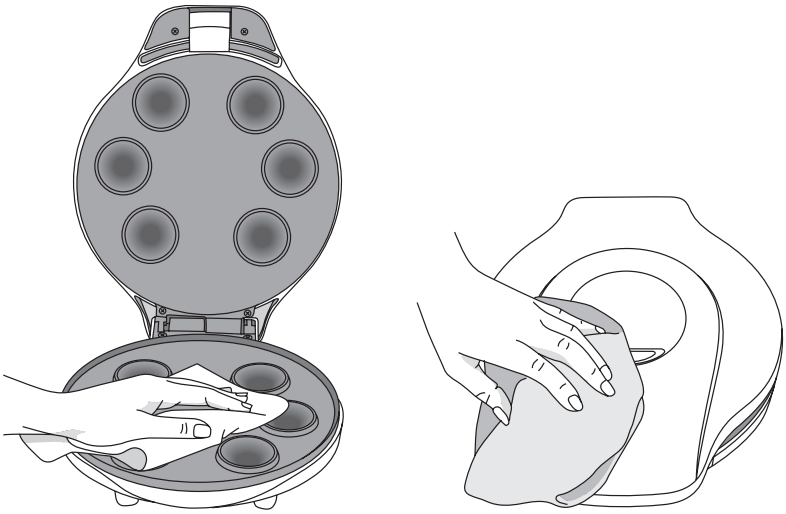

What are Cake Pops?

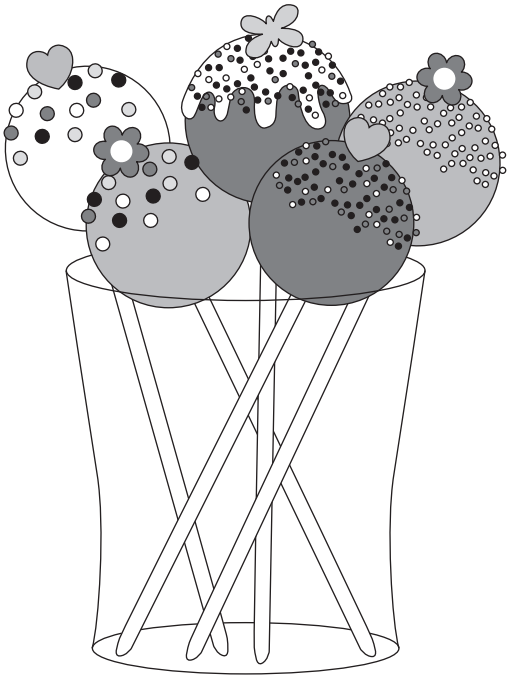

Cake Pops are delicious balls of cake that are a cross between a cake and a lollipop, they are tasty miniature treats. Cake Pops are so easy to bake and so much fun to decorate. Cake pops are great for friends and family, and they make an exquisite centrepiece for any occasion.

Once they have been baked they are dipped into frosting and then the fun begins. Use sprinkles, glitters and dusts to create your masterpiece. You or your family will enjoy hours of fun decorating these small bites of sweetness on a stick.

Let the fun begin!...

Using your Cake Pop Maker

Caution: The surface of your Cake Pop Maker will become hot, so exercise caution. Steam may escape during cooking and when lifting the lid. This is normal, but take care. Use oven gloves to open and close the lid.

1. Preheat your Cake Pop Maker. The orange light will illuminate immediately. When the green light illuminates (allow 2 minutes), your Cake Pop Maker is ready to use. The green light will cycle on and off as the unit maintains baking temperatures.
2. Generously brush both the upper and lower cooking plates with vegetable oil to assist the removal of the cake pops. Use 2 teaspoons to add batter to the moulds (one to add, the other to push batter into the mould). Add 1 heaped teaspoon of batter to each of the cake pop moulds. It is important not to overfill as the mixture will expand when baked.
3. Close the lid and secure the latch.
4. Cook the cake pops for approximately 4 minutes or until they feel spongy and firm, if necessary close the lid again and continue cooking for 15 seconds at a time.
5. Open the lid and allow to cool for 1 minute before removing. Use a heat proof plastic or wooden spatula to remove the cake pops. Place on a wire rack to cool completely before dipping and decorating.
6. If additional cake pops are to be baked, wipe the cooking plate clean with a dry cloth or kitchen paper to remove any residue, and repeat the process above.
7. When all the cake pops have been baked, unplug the machine and leave to cool completely before cleaning.

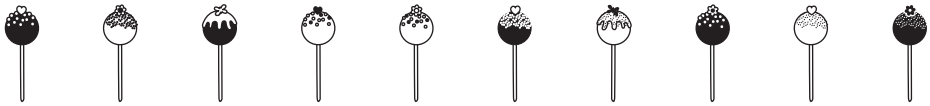

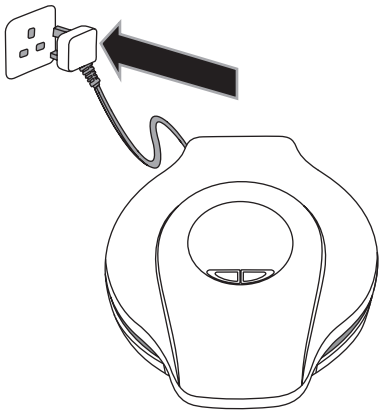

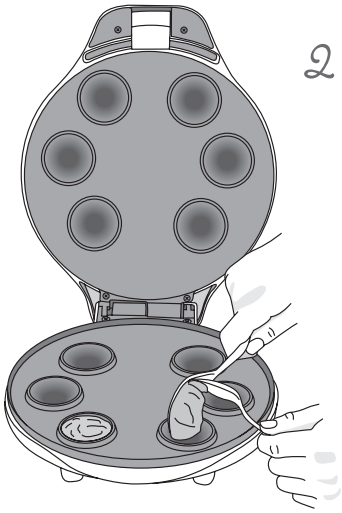

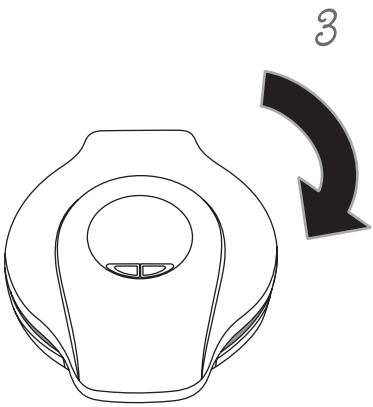

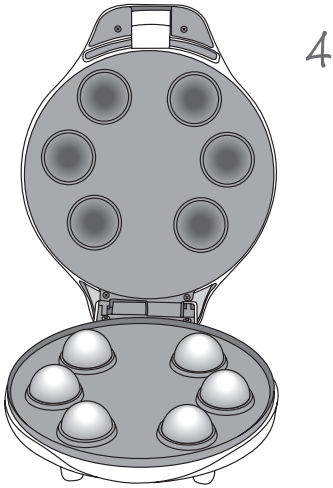

Make me, Bake me, Eat me.

Recipes

lots of tasty easy to follow recipes!

The basic recipe for a cake pop is a cupcake or fairy cake recipe, so if you have a particular favourite you can use it to create cake pops as well.
Each recipe makes approximately 30 cake pops.

Vanilla Cake Pops

What you will need...

- 125g softened butter
- 125g caster sugar
- 2 medium eggs
- 2 tsp vanilla extract
- 125g self raising flour
- 2 tbsp milk

How to make them...

1. Beat together the butter and sugar in a bowl until the mixture is light and fluffy.
2. Add one egg at a time and beat after each addition until fully incorporated, add the vanilla extract and mix to combine. Sift the flour into the mixture and add the milk and beat until the mixture is smooth.

Chocolate Cake Pops

What you will need...

- 125g softened butter
- 125g caster sugar
- 2 medium eggs
- 100g self raising flour
- 3 tbsp cocoa powder
- 2 tbsp milk

How to make them...

1. Beat together the butter and sugar in a bowl until the mixture is light and fluffy.
2. Add one egg at a time and beat after each addition until fully incorporated. Sift the flour and cocoa powder into the bowl and add the milk. Beat until the mixture is smooth and thoroughly combined.

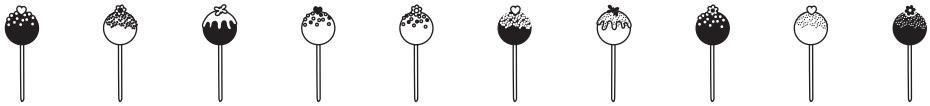

try them all and decide your favourite!

Lemon Cake Pops

What you will need...

- 125g softened butter
- 125g caster sugar
- 2 medium eggs
- 125g self raising flour
- Finely grated rind and juice of 1 unwaxed lemon

How to make them...

1. Beat together the butter and sugar in a bowl until the mixture is light and fluffy.
2. Add one egg at a time and beat after each addition until fully incorporated.
3. Add the lemon juice and rind and mix to combine. Sift the flour into the bowl and beat until the mixture is smooth.

Chocolate Orange Cake Pops

What you will need...

- 125g softened butter
- 125g caster sugar
- 2 medium eggs
- 2 tsp vanilla essence
- Grated zest of 1 un-waxed orange
- ½ tbsp orange juice
- 100g self raising flour
- 25g cocoa powder

How to make them...

1. Beat together the butter and sugar in a bowl until the mixture is light and fluffy.
2. Add one egg at a time and beat after each addition until fully incorporated.
3. Add the vanilla essence, orange zest and orange juice and beat until combined.
4. Sift the flour and cocoa powder into the mixture and beat until the mixture is smooth and fully incorporated.

Recipes

try experimenting with different fillings!

Another great idea that this Cake Pop Maker can be used for is Mini Doughnuts. Roll hot doughnuts in sugar for a great afternoon treat. They are even better if you inject the centre with some of your favourite jam.

Mini Doughnuts

What you will need...

- 230g plain flour
- 125g caster sugar
- 1 ½ tsp baking powder
- 125g butter, melted
- 180ml milk
- 1 egg, lightly beaten
- Caster sugar for coating
- Seedless jam, warmed

How to make them...

1. Combine the dry ingredients together in a large bowl. Whisk together the melted butter, milk and egg in a measuring jug and add to the dry ingredients. Beat these together until the batter is smooth.
2. Preheat the appliance, grease each mould with vegetable oil and add enough batter to fill the mould to the brim. Close the lid and cook for between 4-6 minutes. The doughnuts should be golden brown and spongy when ready.
3. Add some caster sugar to a shallow dish, and place the cooked doughnuts into this, shake them around gently to coat the balls evenly with sugar.
4. If you would like to inject jam into the centre, place some jam into a heat proof bowl and microwave for 30 seconds to warm slightly; this makes it easier to inject. Fill an injector or syringe with jam and inject a small amount in the centre of the doughnut.

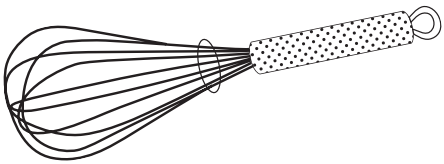

A Little Bit of Magic!

To create great Cake Pops you need a variety of ingredients:

Lollipop sticks – these can be found in cake shops specialising in cake decorating and bakeware, but the cheapest way to buy them is on the internet. There are many websites which specialise in cake decorations and you can buy them in packs of 20, 50 and 100.

Candy Melts – these are small discs of coloured candy that you melt in the microwave. When they melt, you can then dip your cake pop into this to coat the cake ball. Candy Melts come in a variety of colours; they stay liquid at room temperature without the need to temper over hot water. When they start to stiffen, simply re-melt in the microwave. After melting if the mixture is a little thick, thin it down with a tablespoon of vegetable oil, or until you reach the desired consistency.

Cake Covering – a cheaper alternative to Candy Melts, this is available from your local supermarket. It is not chocolate but is available in milk chocolate, dark chocolate and white chocolate flavour. It melts well and remains liquid at room temperature for a long time. It is slightly runnier than the Candy Melts but works really well and tastes great.

Sprinkles – there are so many different types of sprinkles available, many of which can be found in your local supermarket, from hundreds and thousands, flowers, heart shapes to glimmer sugar the choice is yours.

Glitter – edible glitter is great for adding a little sparkle to your cake pops, you may find it in your local supermarket but a specialist cake shop or the internet will provide you with a variety of colours.

Food Colouring – these can be in the form of pastes, liquids and paints to provide more detail on your cake pops. These are best applied with a paintbrush.

Polystyrene block – this is great to stand your wet cake pops in while you wait for them to set. This can be left over from protective packaging. If you don't have any you could place your pops in a tall glass while they set.

How to create a Cake Pop

- 1 batch of baked cake balls
- 450g candy melts or cake covering
- 1 tbsp vegetable oil
- Sprinkles for decoration

1. Place the candy melts or cake covering into a microwavable bowl. Heat on a medium setting for about 2 minutes, stirring intermittently through cooking to ensure it melts rather than burns.
2. If using candy melts and the mixture is a little thick, add the vegetable oil and mix well, this will produce a thinner consistency and make coating the cake balls easier.
3. Dip 1cm of the lollipop stick into the melted covering and insert it into the cake ball.
4. Holding the end of the stick, dip the cake ball into the candy melts or cake covering until it is completely covered. You can use a spoon to help cover the cake ball. Gently tap the stick on the side of the bowl to remove excess covering, twirling the stick to ensure an even coating.
5. While the coating is still wet, use sprinkles or sugar-based decorations to add a touch of magic to your cake pop. Insert the finished cake pop into a polystyrene block, or a tall glass until the pop is dry.
6. To store the cake pops, it is best to cover them with cellophane. Do not place them into the fridge without being covered first or they will sweat.

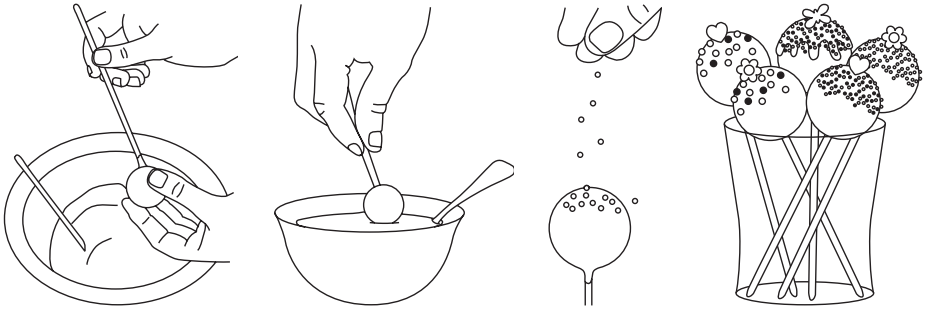

Eat and Enjoy!

Care and Cleaning Instructions

Before cleaning your Cake Pop Maker, unplug it from the mains supply and allow it to cool down completely. There are no parts to disassemble for cleaning.

Never immerse the appliance in water or other liquids.
Never place the Cake Pop Maker in the dishwasher.

Caring for your appliance:

The cooking plates should be conditioned with oil before each use, do this by lightly coating each mould with vegetable oil using a soft pastry brush.

To protect the premium quality nonstick surfaces, only use heat-proof non-metallic utensils to remove the cake pops. The use of plastic or nylon utensils that are not marked as heat-proof may melt and damage the cooking surface.

Cleaning

1. Using a non-metallic utensil, gently scrape any residue off the surface of the plates and wipe the plates with a damp cloth.
2. To remove any stubborn residues, pour a small amount of cooking oil onto the hardened batter. Allow to set for 5 minutes, and then wipe the softened batter off with a soft cloth.
3. Do not use coarse scouring pads or steel wool for cleaning as these will damage the surface, only use products suitable for use on nonstick surfaces.
4. Use a soft damp cloth to clean the exterior. Dry thoroughly.

Storage

Ensure that the Cake Pop Maker has completely cooled down and is clean before storing away. Store your appliance in its packing box or in a clean dry place.
The power cable may be wound under the bottom of the appliance. It can be placed in a vertical position for neat and compact storage.

Servicing

If you drop or damage your Cake Pop Maker it should not be used until it has been examined by an authorised service centre or appliance technician.

Always refer servicing to qualified service personnel.

Guarantee

This product is guaranteed for 1 year from the date of original purchase. If any defect arises due to faulty materials or workmanship, the unit will either be repaired where applicable, replaced or refunded at our discretion.

The following conditions apply:

- The product must be returned to the retailer with original proof of purchase.
- The product must be installed and used in accordance with the instructions contained in this instruction guide.
- It must be used only for domestic purposes.
- It does not cover wear and tear, damage, misuse or consumable parts.
- We accept no responsibility for incidental or consequential loss or damage.
- Valid in the UK only.

Customer Helpline: 0845 467 6743

For technical queries, please contact:
Sensiohome,
1 Old Parkbury Lane,
Colney Street,
St Albans,
Hertfordshire,
AL2 2EB.

CE

This product is manufactured to comply with the radio interference requirements of EEC Directive 93/68 EEC.

Have fun decorating using candy melts and finish with sprinkles or sugar-based decorations to add a touch of magic to your cake pop

cook then decorate!

www.sensiohome.com